Lecture 1

Instruction Execution Principles

NPTEL Online Course Multi-Core Computer Architecture - Storage and Interconnects Dr. John Jose IIT Guwahati

Dr. John Jose

Assistant Professor

Department of Computer Science & Engineering

Indian Institute of Technology Guwahati, Assam.

Processor Memory Interaction

Instruction Fetch
Instruction Decode
Operand Fetch
Execute
Result Store
Next Instruction

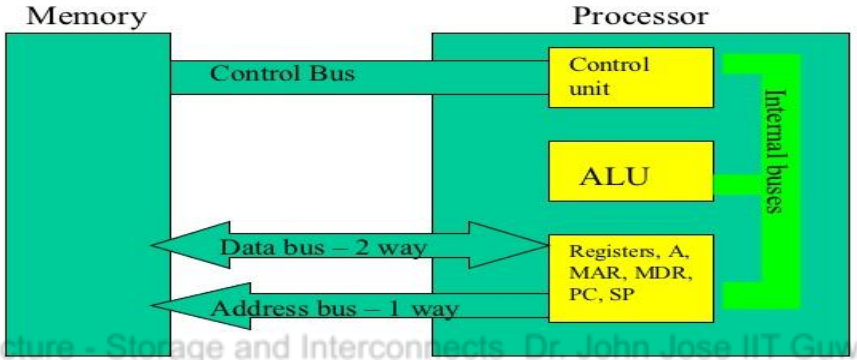

NPTEL Online Course Multi-Core Computer Architecture - Storage and Interconnects Dr. John Jose IIT Guwahati

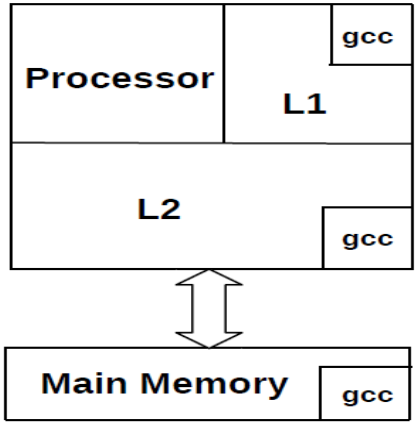

Execution Cycle

Instruction Fetch	**Obtain instruction from program storage**
Instruction Decode	**Determine required actions and instruction size**
Operand Fetch	**Locate and obtain operand data**
Execute	**Compute result value or status**
Result Store	**Deposit results in storage for later use**
Next Instruction	**Determine successor instruction**

NPTEL Online Course Multi-Core Computer Architecture: Storage and Interconnects Dr. John Jose IIT Guwahati

Processor Memory Interaction

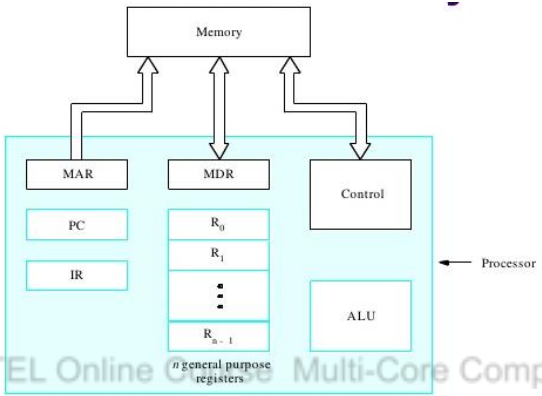

NPTEL Online Course Multi-Core Computer Architecture - Storage and Interconnects Dr. John Jose IIT Guwahati

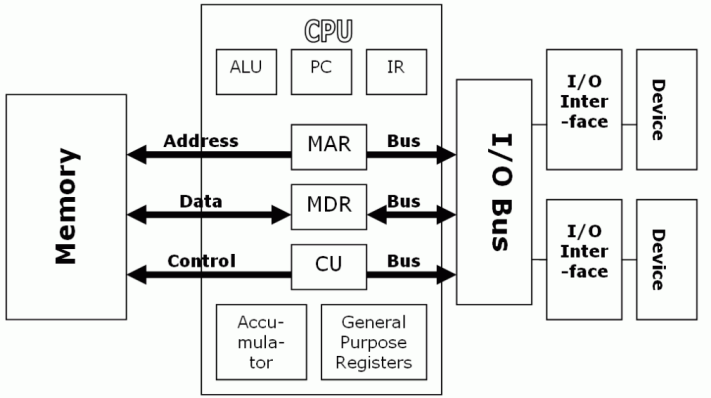

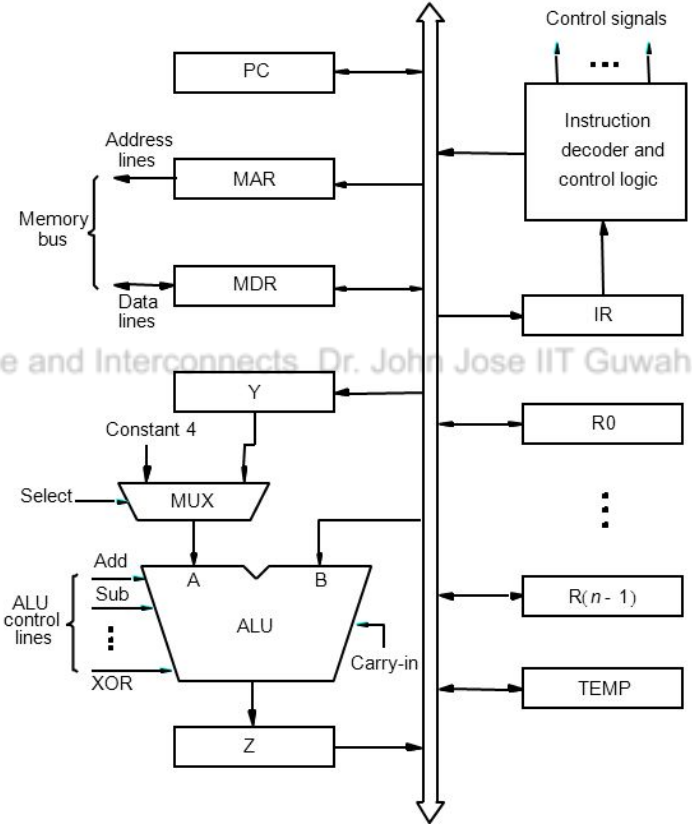

Processor Memory Interaction

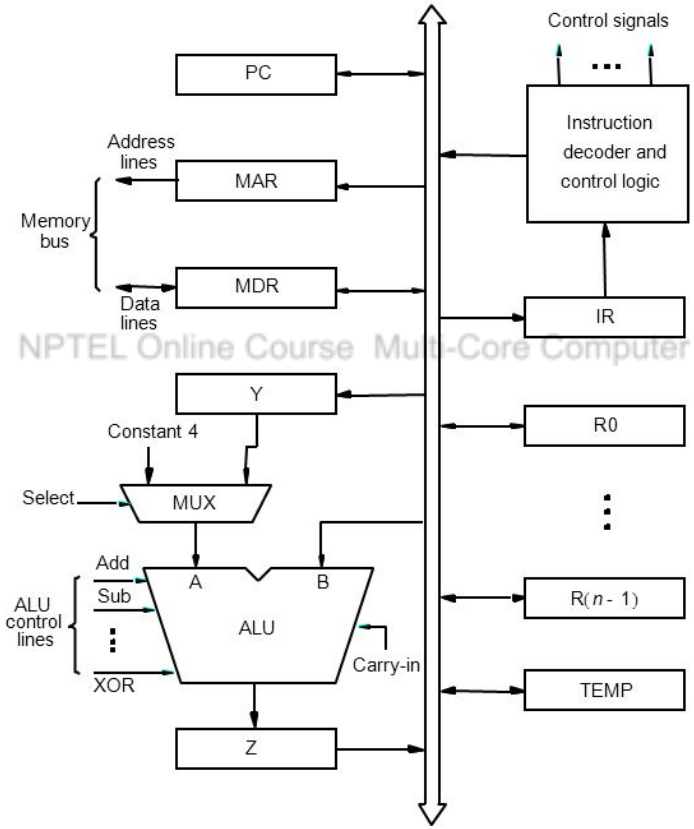

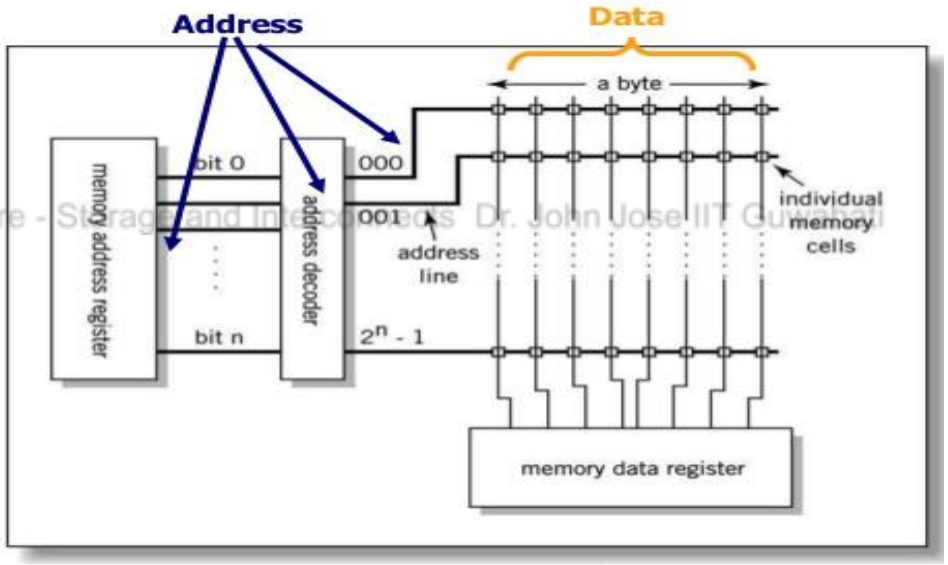

NPTEL Online Course Multi-Core Computer Architecture - Storage and Interconnects Dr. John Jose IIT Guwahati

How memory works ?

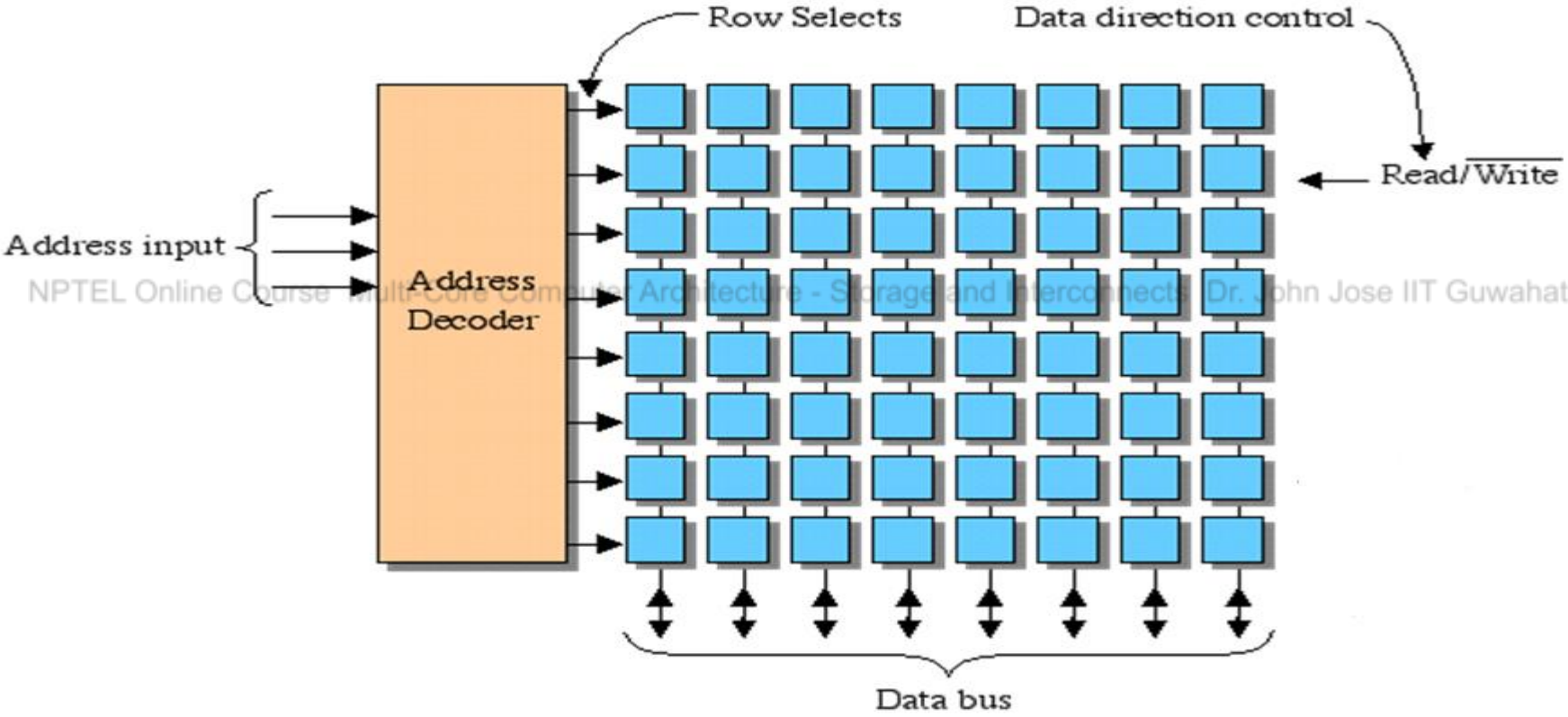

NPTEL Online Course Multi-Core Computer Architecture - Storage and Interconnects Dr. John Jose IIT Guwahati

How memory works ?

8KB = 8 x 1KB chips

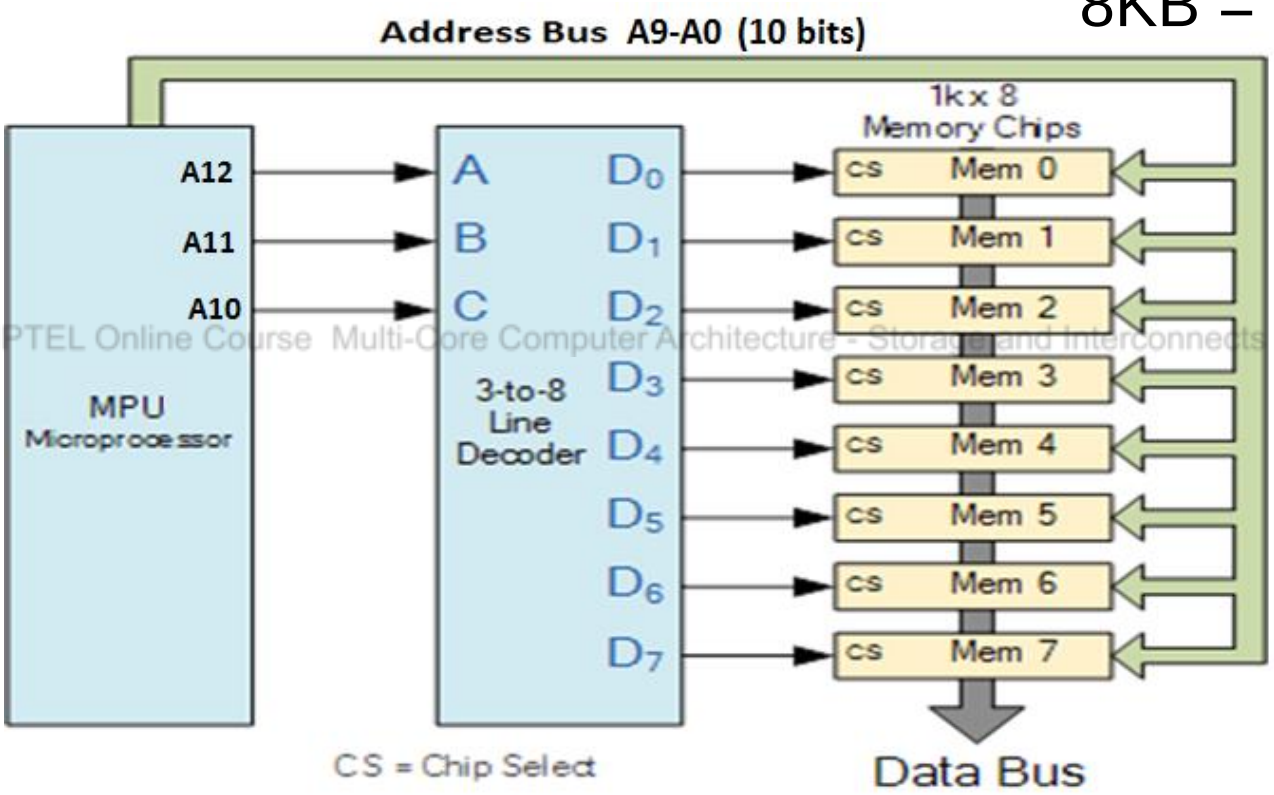

NPTEL Online Course Multi-Core Computer Architecture - Storage and Interconnects Dr. John Jose IIT Guwahati

Measuring Performance

- When can we say one computer / architecture design is better than others?
  - Desktop PC : execution time of a program
  - Server : transactions / unit time

NPTEL Online Course Multi-Core Computer Architecture - Storage and Interconnects Dr. John Jose IIT Guwahati

- When can we say X is n times faster than Y ?
  - Execution $time_Y$ / Execution $time_X$ = n
  - Throughput $_x$/ Throughput $_y$ = n

Measuring Performance

- **Typical performance metrics:**
  - Response time
  - Throughput
  - Execution time
  - CPU computation time
- **Benchmarks**
  - Synthetic benchmarks
  - Benchmark suites (e.g. SPEC06, PARSEC, SPLASH)

NPTEL Online Course Multi-Core Computer Architecture - Storage and Interconnects Dr. John Jose IIT Guwahati

Benchmark Suite

SPEC CPU2006 Programs

	Benchmark	Language	Descriptions
CINT2006 (Integer) 12 programs	400.perlbench	C	PERL Programming Language
	401.bzip2	C	Compression
	403.gcc	C	C Compiler
	429.mcf	C	Combinatorial Optimization
	445.gobmk	C	Artificial Intelligence: go
	456.hmmer	C	Search Gene Sequence
	458.sjeng	C	Artificial Intelligence: chess
	462.libquantum	C	Physics: Quantum Computing
	464.h264ref	C	Video Compression
	471.omnetpp	C++	Discrete Event Simulation
	473.astar	C++	Path-finding Algorithms
	483.Xalancbmk	C++	XML Processing
CFP2006 (Floating Point) 17 programs	410.bwaves	Fortran	Fluid Dynamics
	416.gamess	Fortran	Quantum Chemistry
	433.milc	C	Physics: Quantum Chromodynamics
	434.zeusmp	Fortran	Physics/CFD
	435.gromacs	C/Fortran	Biochemistry/Molecular Dynamics
	436.cactusADM	C/Fortran	Physics/General Relativity
	437.leslie3d	Fortran	Fluid Dynamics
	444.namd	C++	Biology/Molecular Dynamics
	447.dealII	C++	Finite Element Analysis
	450.soplex	C++	Linear Programming, Optimization
	453.povray	C++	Image Ray-tracing
	454.calculix	C/Fortran	Structural Mechanics
	459.GemsFDTD	Fortran	Computational Electromagnetics
	465.tonto	Fortran	Quantum Chemistry
	470.lbm	C	Fluid Dynamics
	481.wrf	C/Fortran	Weather Prediction
	482.sphinx3	C	Speech recognition

Target Programs application domain: Engineering and scientific computation

Source: http://www.spec.org/cpu2006/

NPTEL Online Course Advanced Core Computer Architecture - Storage and Interconnects Dr. John Jose IIT Guwahati

Benchmark based evaluation

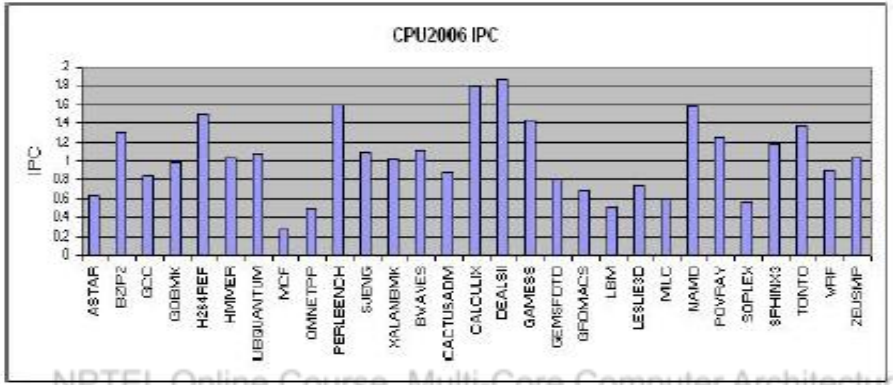

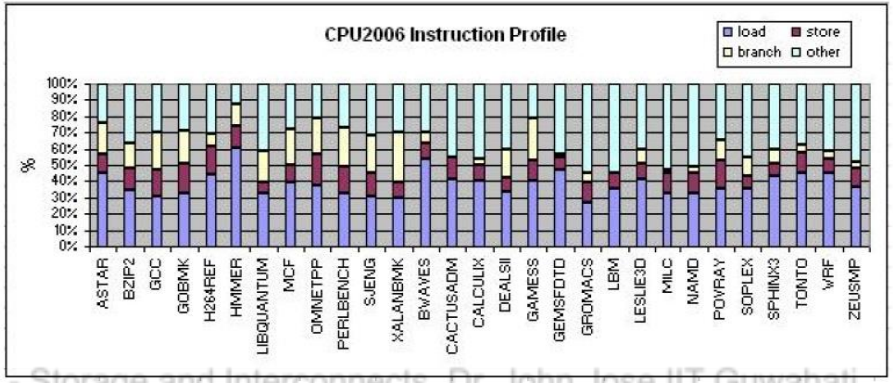

NPTEL Online Course Multi-Core Computer Architecture - Storage and Interconnects Dr. John Jose IIT Guwahati

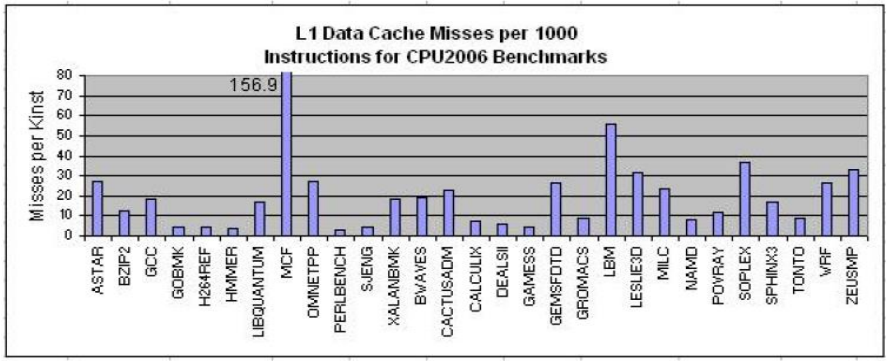

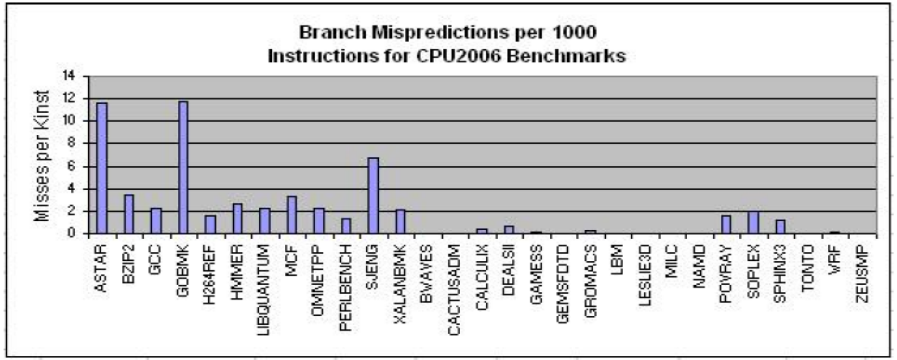

SPEC Ratio

$$\text{SPECRatio}_A = \frac{\text{Execution time}_{\text{reference}}}{\text{Execution time}_A}$$

Reference for SPEC 2006:
Sun Ultra Enterprise 2 workstation with a 296-MHz UltraSPARC II processor

NPTEL Online Course Multi-Core Computer Architecture Storage and Interconnects Dr. John Jose IIT Guwahati

$$\frac{\text{SPECRatio}_A}{\text{SPECRatio}_B} = \frac{\dfrac{\text{Execution time}_{\text{reference}}}{\text{Execution time}_A}}{\dfrac{\text{Execution time}_{\text{reference}}}{\text{Execution time}_B}} = \frac{\text{Execution time}_B}{\text{Execution time}_A} = \frac{\text{Performance}_A}{\text{Performance}_B}$$

$$GeometricMean\,(a_1, a_2, a_3, \ldots, a_N) = \sqrt[N]{\prod_i^N a_i}$$

Amdahl's Law

- Amdahl's Law defines the speedup that can be gained by improving some portion of a computer.
- **The performance improvement to be gained from using some faster mode of execution is limited by the fraction of the time the faster mode can be used.**

NPTEL Online Course Multi-Core Computer Architecture - Storage and Interconnects Dr. John Jose IIT Guwahati

$$\text{Execution time}_{\text{new}} = \text{Execution time}_{\text{old}} \times \left((1 - \text{Fraction}_{\text{enhanced}}) + \frac{\text{Fraction}_{\text{enhanced}}}{\text{Speedup}_{\text{enhanced}}} \right)$$

$$\text{Speedup}_{\text{overall}} = \frac{\text{Execution time}_{\text{old}}}{\text{Execution time}_{\text{new}}} = \frac{1}{(1 - \text{Fraction}_{\text{enhanced}}) + \frac{\text{Fraction}_{\text{enhanced}}}{\text{Speedup}_{\text{enhanced}}}}$$

Amdahl's Law- Illustration

Example: Suppose that we want to enhance the floating point operations of a processor by introducing a new advanced FPU unit. Let the new FPU is 10 times faster on floating point computations than the original processor. Assuming a program has 40% floating point operations, what is the overall speedup gained by incorporating the enhancement?

$$\text{Speedup}_{\text{overall}} = \frac{1}{(1 - \text{Fraction}_{\text{enhanced}}) + \frac{\text{Fraction}_{\text{enhanced}}}{\text{Speedup}_{\text{enhanced}}}}$$

Solution:

Fraction enhanced = 0.4

Speedup enhanced = 10

$$\text{Speedup}_{\text{overall}} = \frac{1}{0.6 + \frac{0.4}{10}} = \frac{1}{0.64} \approx 1.56$$

Amdahl's Law for multi-cores

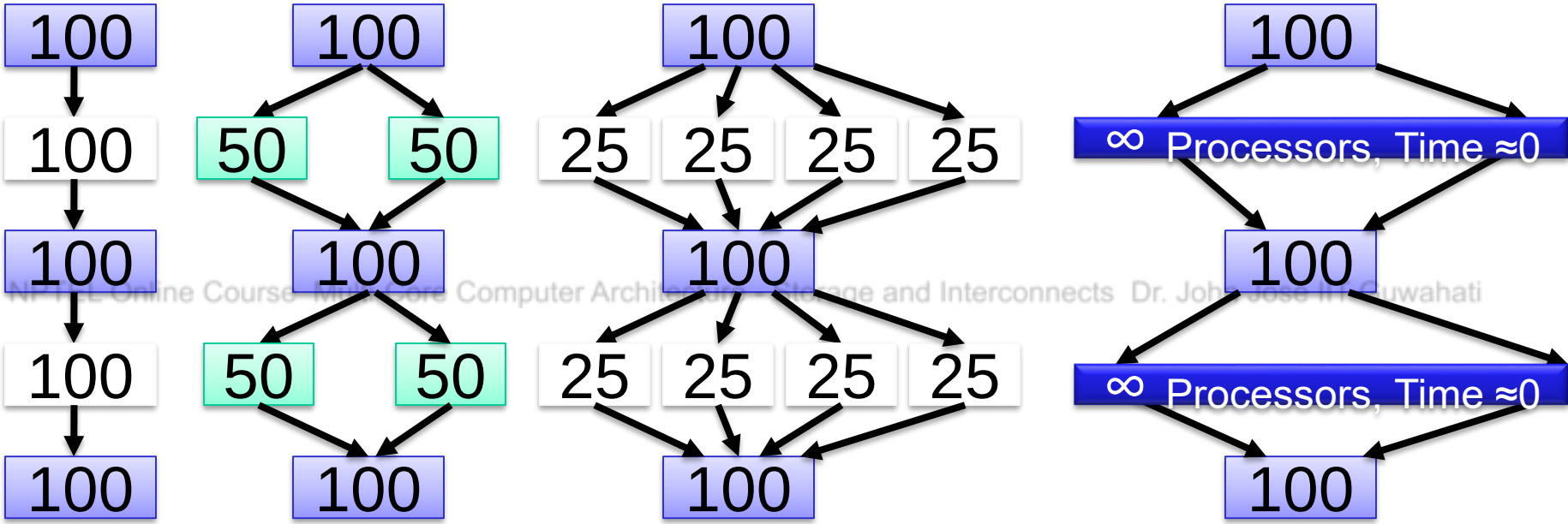

NPTEL Online Course: Multi-core Computer Architecture, Storage and Interconnects Dr. John Jose IIT Guwahati

Work 500,
Time 500
Sp=1X

Work 500,
Time 400
Sp=1.25X

Work 500,
Time 350
Sp=1.4X

Work 500,
Time 300
Sp=1.7X

How much Speed up you can achieve ?

Amdahl's Law:

$$Speedup = \frac{1}{(1-\alpha) + \frac{\alpha}{n}}$$

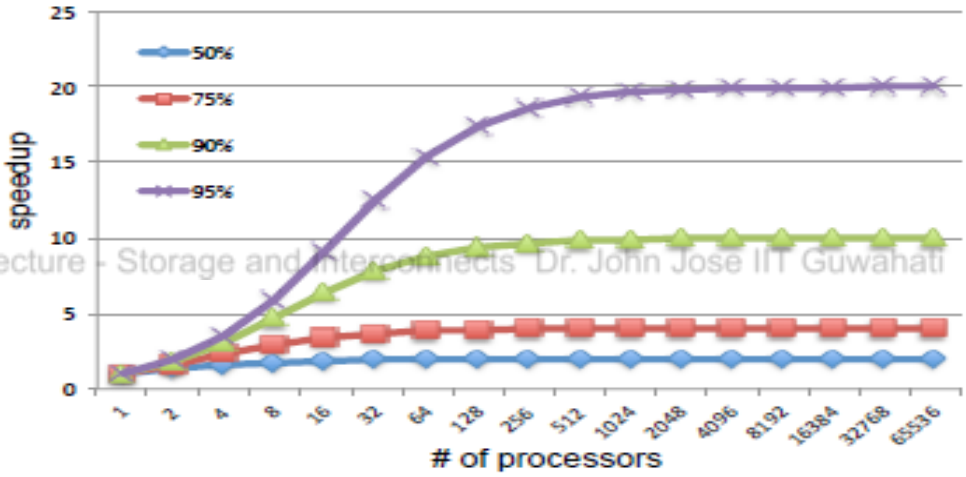

NPTEL Online Course Multi-Core Computer Architecture - Storage and Interconnects Dr. John Jose IIT Guwahati

Instruction Set Architecture

- Instruction vs Program vs Software
- Opcode, Operand
- Classification of ISA

NPTEL Online Course Multi-Core Computer Architecture - Storage and Interconnects Dr. John Jose IIT Guwahati

  - Stack architecture
  - Accumulator architecture
  - Register-Memory architecture
  - Register-Register/Load Store architecture

Instruction Set Architecture

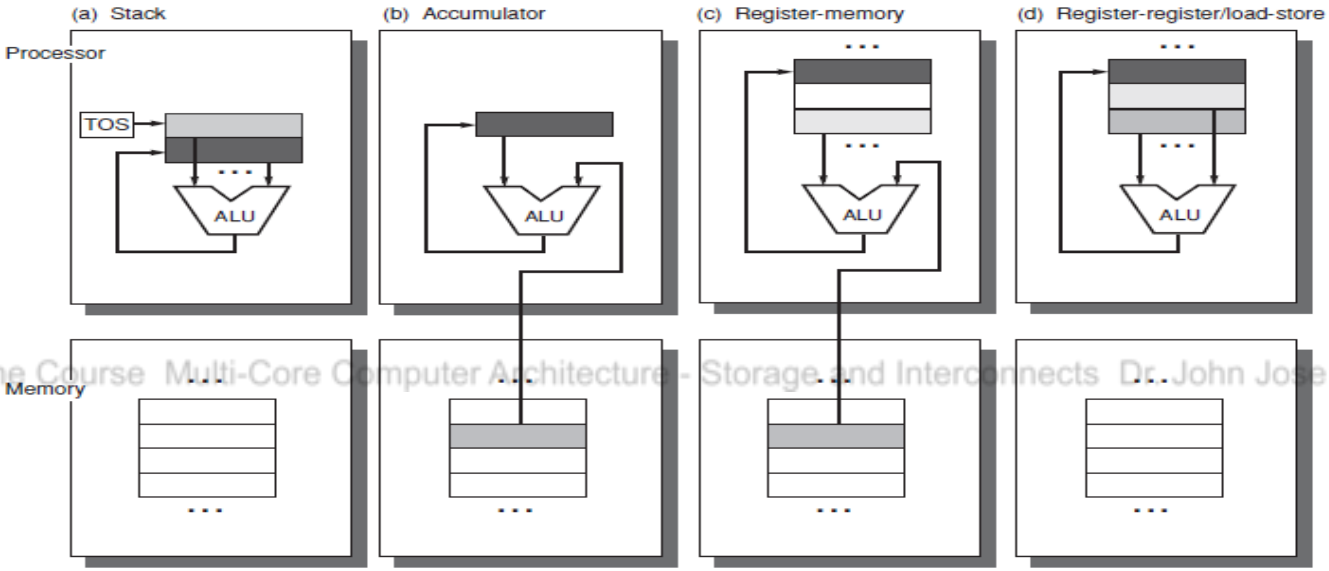

NPTEL Online Course Multi-Core Computer Architecture - Storage and Interconnects Dr. John Jose IIT Guwahati

Stack	Accumulator	Register (register-memory)	Register (load-store)
Push A	Load A	Load R1,A	Load R1,A
Push B	Add B	Add R3,R1,B	Load R2,B
Add	Store C	Store R3,C	Add R3,R1,R2
Pop C			Store R3,C

The code sequence for C = A + B for four classes of instruction sets.

Byte Ordering

❖ **Big Endian vs Little Endian**

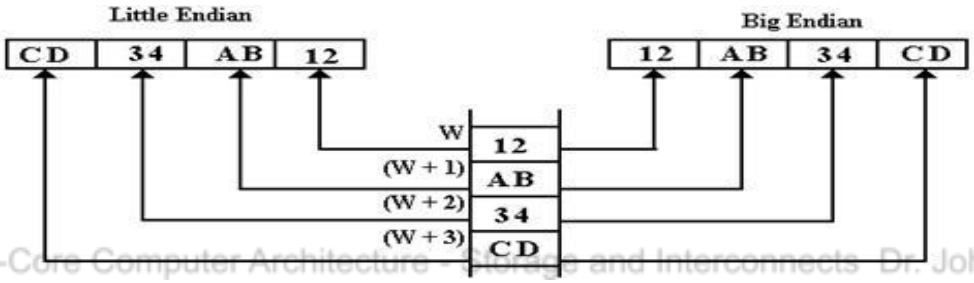

NPTEL Online Course Multi-Core Computer Architecture - Storage and Interconnects Dr. John Jose IIT Guwahati

Big Endian vs. Little Endian

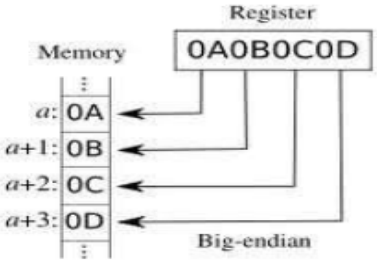

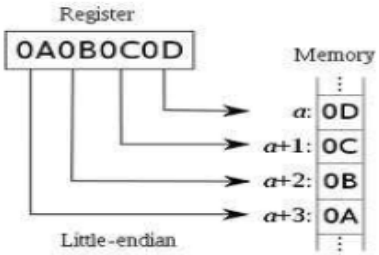

Int i = 450 = $2^8 + 2^7 + 2^6 + 2$ = x000001C2

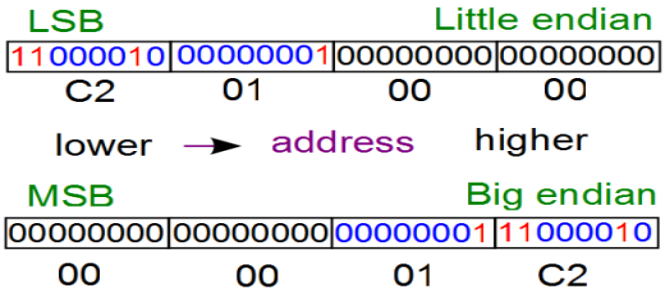

Byte / Word Alignment

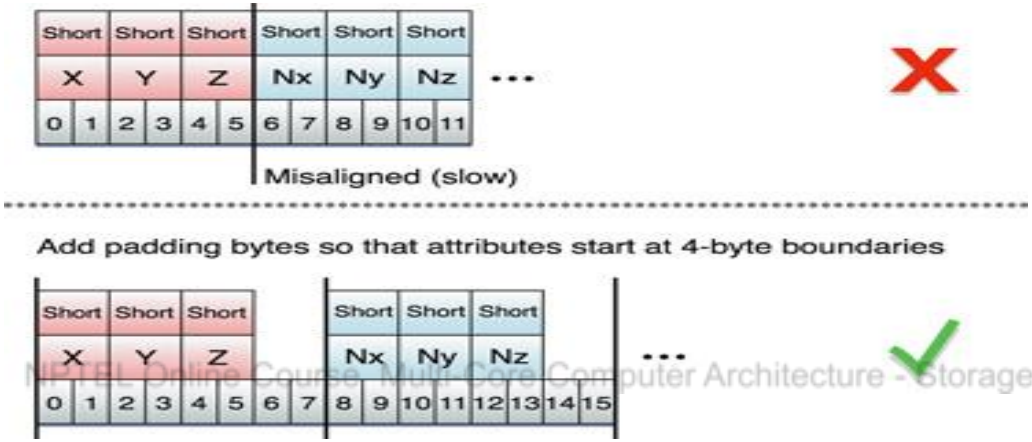

NPTEL Online Course: Multi-Core Computer Architecture - Storage and Interconnects Dr. John Jose IIT Guwahati

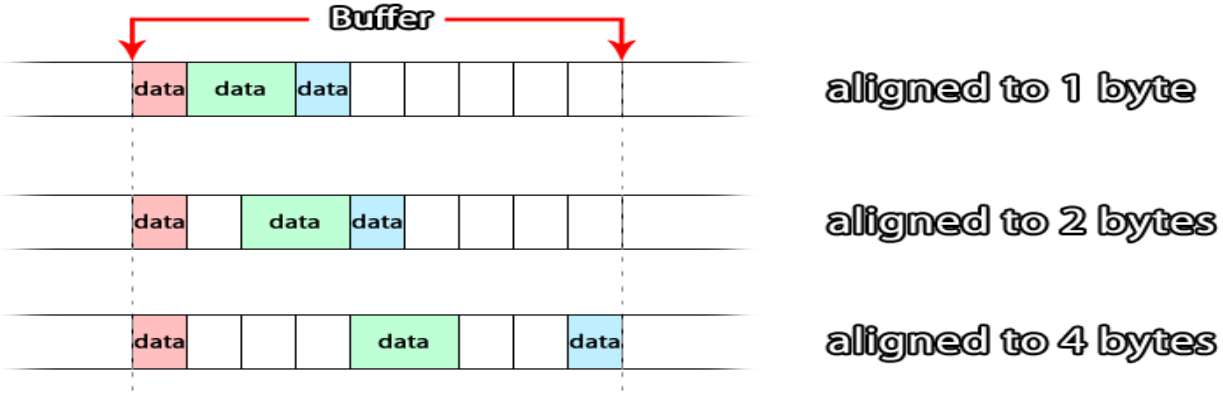

Principles of Computer Design

- All processors are driven by clock.
- Expressed as clock rate in GHz or clock period in ns

$$\text{CPU time} = \text{CPU clock cycles for a program} \times \text{Clock cycle time}$$

$$\text{CPI} = \frac{\text{CPU clock cycles for a program}}{\text{Instruction count}}$$

NPTEL Online Course Multi-Core Computer Architecture - Storage and Interconnects Dr. John Jose IIT Guwahati

$$\text{CPU time} = \text{Instruction count} \times \text{Cycles per instruction} \times \text{Clock cycle time}$$

$$\frac{\text{Instructions}}{\text{Program}} \times \frac{\text{Clock cycles}}{\text{Instruction}} \times \frac{\text{Seconds}}{\text{Clock cycle}} = \frac{\text{Seconds}}{\text{Program}} = \text{CPU time}$$

- Clock cycle time - hardware technology
- Cycles/Instruction - organization and ISA
- Instruction Count -ISA and compiler technology

Principles of Computer Design

❖ Different instruction types having different CPIs

$$\text{CPU clock cycles} = \sum_{i=1}^{n} \text{IC}_i \times \text{CPI}_i$$

$$\text{CPU time} = \left(\sum_{i=1}^{n} \text{IC}_i \times \text{CPI}_i \right) \times \text{Clock cycle time}$$

$$\text{CPI} = \frac{\sum_{i=1}^{n} \text{IC}_i \times \text{CPI}_i}{\text{Instruction count}}$$

NPTEL Online Course: Multi-core Computer Architecture: Storage and Interconnects Dr. John Jose IIT Guwahati

Design Example

A common transformation required in graphics processors is square root. Implementations of floating-point (FP) square root vary significantly in performance, especially among processors designed for graphics. Suppose FP square root (FPSQR) is responsible for 20% of the execution time of a critical graphics benchmark.

NPTEL Online Course, Multi-Core Computer Architecture, Storage and Interconnects, Dr. John Jose IIT Guwahati

One proposal is to enhance the FPSQR hardware and speed up this operation by a factor of 10. The other alternative is just to try to make all FP instructions in the graphics processor run faster by a factor of 1.6; FP instructions are responsible for half of the execution time for the application. Compare these two design alternatives using Amdahl's Law.

Reading Exercises

- **Computer Architecture-A Quantitative Approach** (5th edition),

  John L. Hennessy, David A. Patterson, Morgan Kaufman.

  - Chapter 1.8 – Measuring, Reporting and summarizing Performance

NPTEL Online Course Multi-Core Computer Architecture - Storage and Interconnects Dr. John Jose IIT Guwahati

  - Chapter 1.9 – Quantitative Principles of Computer Design

johnjose@iitg.ac.in
http://www.iitg.ac.in/johnjose/